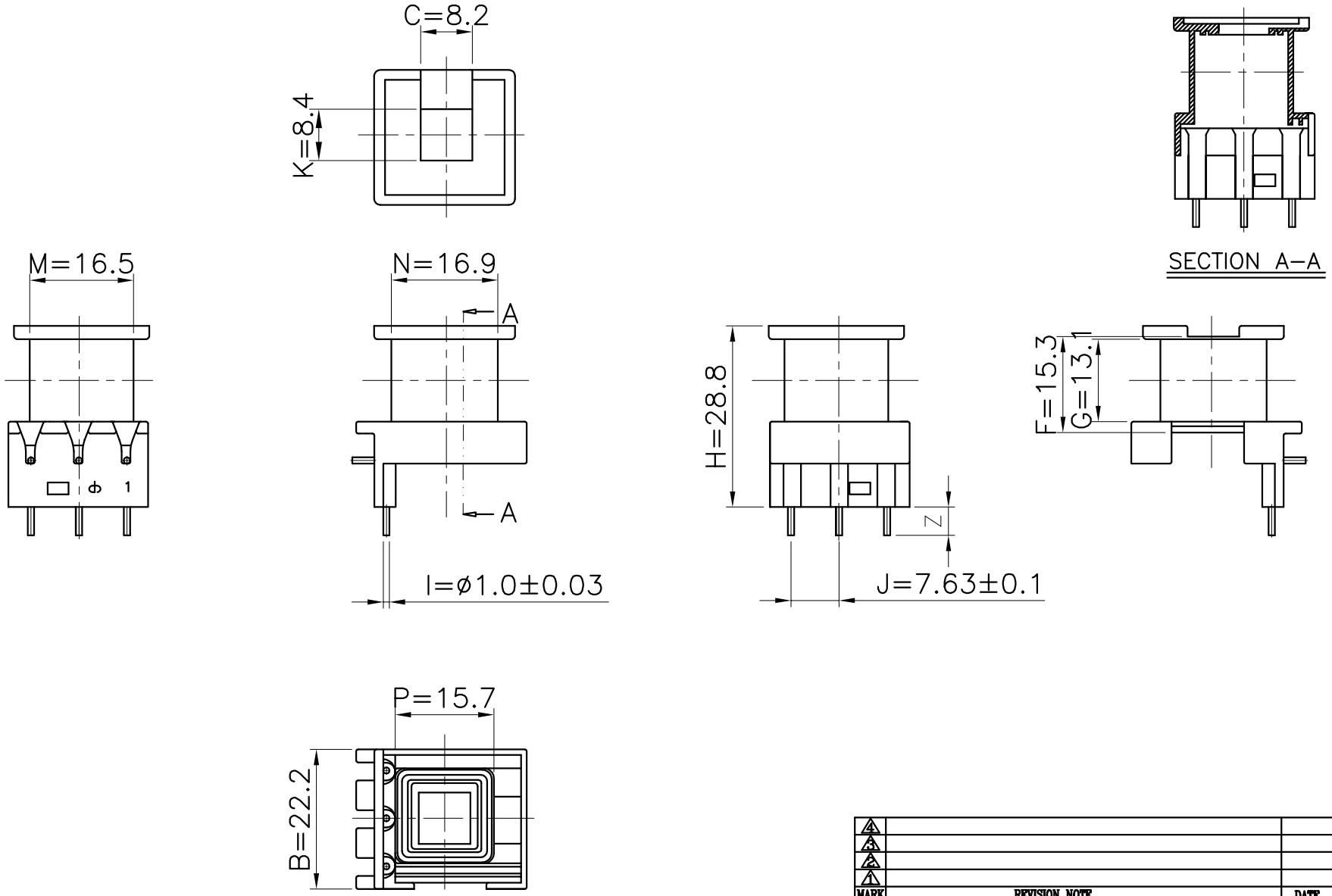

MARK	REVISION NOTE	DATE	DRAWN	CHECKED	APPROVED
4					
3					
2					
1					

DRAWN	CHECKED	APPROVED	MATERIAL : P.B.T	UL REC. : UL94V-0	THIRD ANGLE PROJ.	SCALE : 1/1
Min Ah, Cho		Jin Oh, Yoo	Z : PIN LENGTH (According to customer's request)	DATE : 2003.08.05	TOLERANCE :±0.1 (Unless otherwise specified)	UNIT : m/m
주식회사 대 흥 보 빈 DAE HEUNG BOBBIN CO., LTD			TITLE UU 21*32 (3P) "V" (1차)		DWG NO DH-030805-1014-01	

(주)대흥보빈